EFFECTIVENESS OF FUZZY LOGIC TUNED PROPORTIONAL INTEGRAL DERIVATIVE CONTROLLER IN CERAMIC KILN TEMPERATURE CONTROL

Akinola A. O. and Oyebamiji B.J
Department of Computer Engineering Technology; Rufus Giwa Polytechnic, Owo, Ondo State, Nigeria.
aokomoakin@gmail.com

Abstract
Ceramics are compounds between metallic and nonmetallic elements. A high-temperature oven is known as kiln.Heat treatment, often at high temperature dominates ceramics Production process. Hence, heating must be carefully controlled to strike a balance between minimizing drying time and avoiding differential shrinkage, warping, and distortion. Thus, a control mechanism that assures precision and quality control for even a non-linear and time varying system is required. Descriptive survey method was employed in this research. Data were collected from verified records and observations.Parameters from the dynamic model were used to drive tuning values for the proportional, integral, derivative (PID) controller. The model was demonstrated through simulation using MATLAB-SIMULINK development tools. The simulation results show that, compared with the traditional PID controller, fuzzy tuned PID controller has a better dynamic response curve, shorter response time, small overshoot, high steady precision, good static and dynamic performance. The paper recommended the application of self-tuned fuzzy PID for effective temperature control in ceramic industry.
Keywords: Ceramic, Kiln, Fuzzy logic, Tuning, MATLAB-SIMULINK

Introduction

Ceramics are formed as compound of both metallic and nonmetallic elements such that their inter-atomic bonds may be ionic or mostly ionic. Elements from which most common ceramics are formed include oxides, carbides, nitrides, silicide, borides, and phosphides, among others. A kiln is an oven of high temperature used for drying substances like wood and ceramics. Manufacturing of all ceramics require heat treatment, often at high temperature. During this process, chemical and physical reactions occur which cause the material to be permanently altered.

According to Dingyu, Yang and Derek (2007),oven control system has the characteristics of non-linearity, time delays and set-point response. Essentially, the oven optimal performance combined with precision and quality control of temperature is desirable. The controller widely used in this industry is Proportional Integral Derivative (PID) controller due to its robustness, functional simplicity and performance in a wide range of operating conditions. Tuning is a process of adjusting the PID parameters which can result in proportional band gain, integral gain reset, derivative gain rate adjustment to the optimal values for the desired system control response. Proper tuning of PID parameters enhanced their robust and reliable performance for most systems. To accurately tuned these parameters without extensive operator involvement, an intelligent means of tuning is required. In this context, the use of fuzzy logic (FL) is particularly appropriate, since it allows the use of operator's experience and, therefore, add some sort of intelligence to the automatic control scheme.

Literature Review

Proportional Integral Derivative (PID) Controller

A PID controller is a generic controller with feedback loop mechanism. A closed loop control system is one that determines a difference in the desired and actual condition, which is referred to as “error” and creates a correction control command to remove this error.

The controller demonstrates three ways of looking at this error and correcting it (Constantin, 2012). The first way is the P of PID, the proportional term. This term represents the control action made by the controller in proportion to the error. In other words, the bigger the error, the bigger the correction. The I in PID is for the integral of the error over time. The integral term produces a correction that considers the time the error has been present. Stated in other words, the longer the error continues, the bigger the correction. Lastly, the D in PID stands for derivative. In the derivative term, the corrective action is related to the derivative or change of the error with respect to

time. The cumulative effect of these three parameters is used to adjust the process based on control element which are the position of the Control valve, damper, and the power supplied to the heating element. Mathematically, the PID controller output U(t) can be expressed as:

$$U(t) = K_p e_{(t)} + Ki\int_0^t e(t)d(\tau) + k_d \frac{d}{dt}e(t) \quad \ldots\ldots 1$$

K_p = proportional gain, which is a tuning parameter, K_i = integral gain, also a tuning parameter,
K_d = derivative gain, also a tuning parameter, e= error, T = time or instantaneous time (the present) and τ = variable of integration; takes on value from time 0 to the present, t.

Tuning a PID controller implies an act of adjustment of its control parameters (Aborisade and Adewuyi ,2014). The main challenges in tuning is selecting the values of these three parameters to meet different control specifications such as set point following, load disturbance attenuation, the robustness with respect to model uncertainties and rejection of measurement noise.

Fuzzy Logic Structure

In the view of Hassanein and Ali (2010), fuzzy logic can be described as a methodology to represent and implement a (smart) human's knowledge about how to control a system. It is a tuning control which can be described simply as ''computing with words rather than numbers'', or ''control with sentences rather than equations''

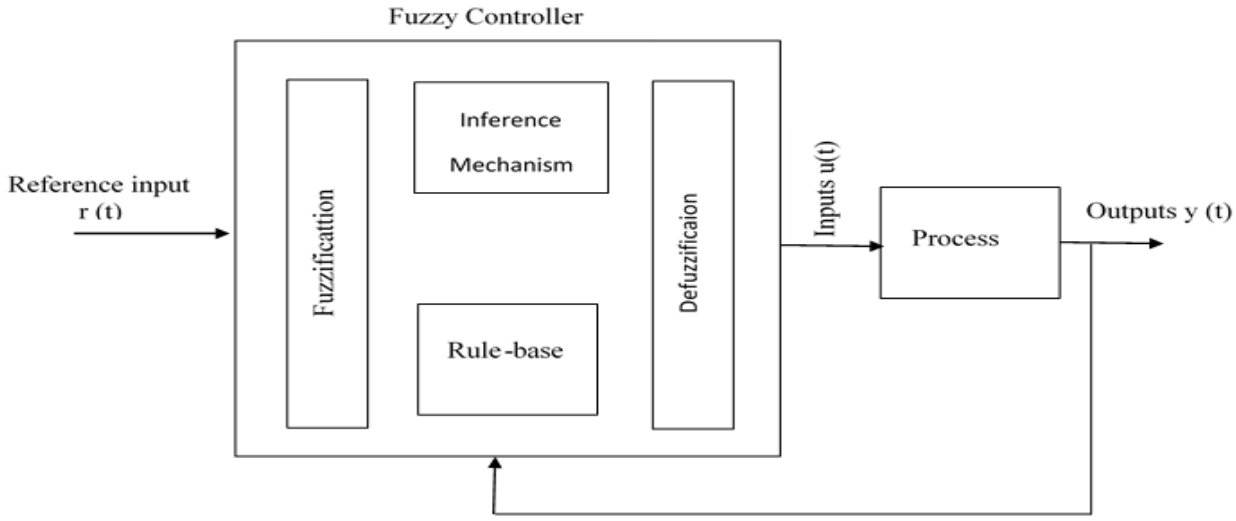

Figure1: Fuzzy Logic Structure

The specific components of a fuzzy controller that support its design procedure is shown in Figure1. The inputs are most often a crispmeasurement from some measuring equipment, rather than semantic. Fuzzification can be described as the process through which numeric inputs are being transformed into a form that can be used by the inference mechanism. It is also a process through which each piece of input data is being converted to degrees of membership by a lookup in one or several membership functions. The input data are being matched with the conditions of the fuzzy rules to determine how well the condition of each rule matches that particular input instance. There is a degree of membership for each linguistic term that applies to that input variable.

There are, at least, four main sources for finding control rules. The most common approach to establishing such a collection of rules of thumb is by questioning experts, including operators in the system through a carefully organised questionnaire with reference to operator's control actions (Afshan, Shaguffa and Mohammad, 2013). Fuzzy IF-THENrules can be obtained from an operator's control actions or a log book observation. The rules express input-output relationships based on the fuzzy system model of the process.A linguistic rule base may be viewed as an inverse model of the controlled process. The rules collection is known as a rule base. The rules are organized in the familiar IF-THEN format, and the IF-side is called the **condition** and the THEN-side is called the **conclusion**.

The mechanism above makes use of information formed by fuzzification about the current inputs to decide which of the rules to be applied in the current situation, and forms

conclusions about what the plant input should be (Bao-Gang, Mann and Gosine, 2001). The inference engine looks up the membership values based on the condition of the rule as applied to each rule. Defuzzification converts the conclusions reached as specified in the inference mechanism into a numeric input for the plant. The fuzzy set so obtained has to be converted to a number which can be sent as a control signal to the process. The fuzzy set obtained is thus defuzzified into a crisp control signal. Any of these defuzzification methods can be employed: Centre of gravity, Bisector of area, Mean of maxima, or Leftmost maximum and Rightmost maximum.

Methodology

The study made use of descriptive survey method to establish the effectiveness of fuzzy logic tuned proportional integral derivative controller in ceramic kiln temperature control. Toward this end, essential data were collected from journals and internet facilities which were then simulated in MATLAB-SIMULINK computer package.

Ceramic Kiln Temperature Control System

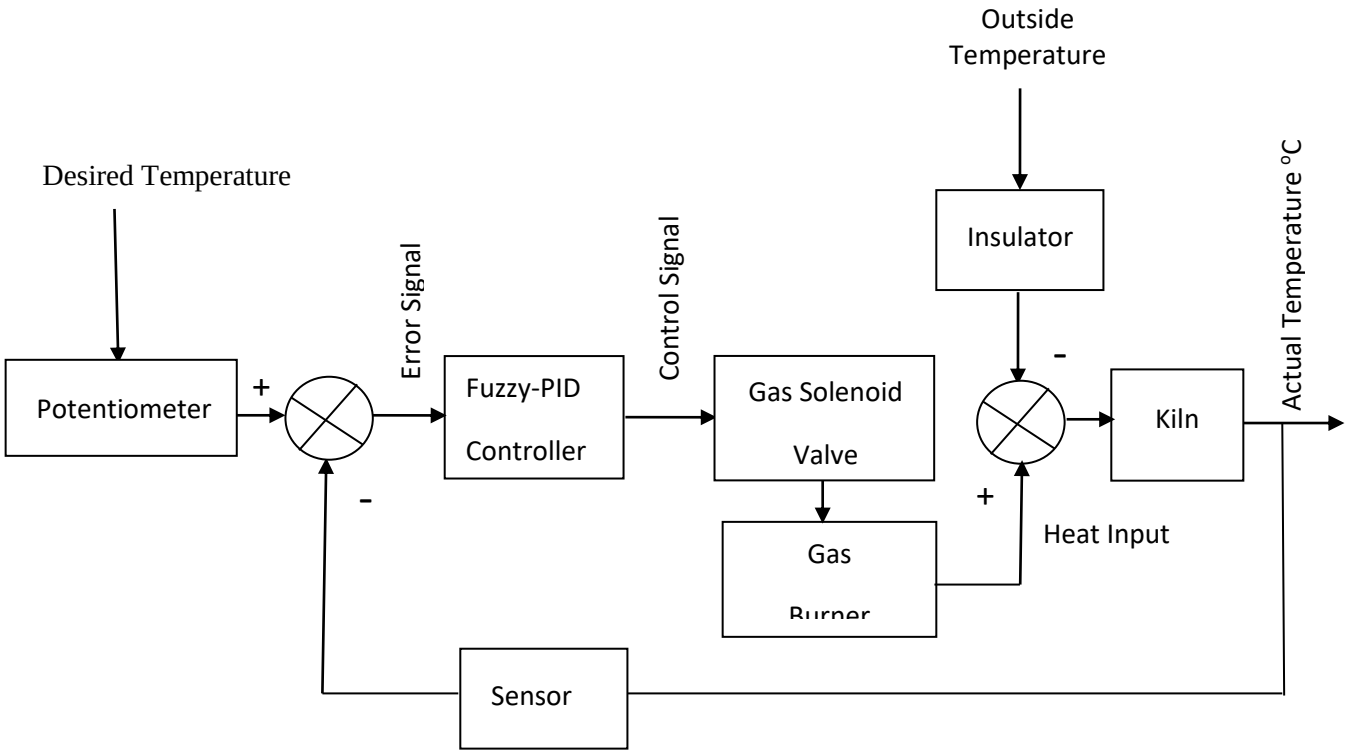

Figure 2 Block Diagram of Ceramic Kiln Temperature Control System

Figure 2 shows the structure of the Ceramic Kiln Temperature Control System (CKTCS). This work centered on the development of a simple model controller which can foretell the temperature in a gas-fired and down draft kiln. The methodology used in this paper considered the kiln volume, construction materials nature, pottery-ware material nature that will be processed, rate of fuel input, supplied air, and the processes of heat transfer which involves radiation, convection and conduction. Here, the kiln temperature parameter is monitored with the potentiometer. The output signal from this sensor is digitized by an analogue to digital converter and fed back to the fuzzy-PID controller. The controller then formulates an appropriate control signal based on the changes of the kiln temperature that is being constantly sensed by the sensor and then decides which action to be taken. According to Satya and Omhari (2012), the firing cycle, which is the temperature versus time cycle for manufacturing the ceramic material, has typically the following stages:

a) Very slow firing (or Smoking): Ambient to 200 ^{o}C at 1 deg C/ min, the point at which residual moisture is expelled.

b) Slow firing: 200 to 500 ^{o}C at 2 deg C/ min, here organic substances are carbonized and combusted (material strength reduces).

c) Medium firing: 500 to 700 ^{o}C at 3 deg C/ min, here crystalline water of clay minerals leaves, and much energy is needed.

d) Fast firing: 700 ^{o}C to the maximum temperature at 4 to 5 deg C/min: here the organic substances carbonized earlier are subjected to oxidation beyond 800 ^{o}C and removal dust follows. This process requires uniform temperature.

e) Cooling: Controlled cooling is done at a predetermined rate.

Thus, the desired temperature depends on production stage and different set-points would be required.

The kiln temperature is being controlled and monitored to approaching the desired temperature valued. For easy of control and to explore the application of fuzzy-PID controller in the system, a single-zone heating system was considered. This is due to the fact that heating mode is found to be nearly uniform under most situations. As the temperature in this zone changes from the control set-point temperature, the mixed air/fuel quantity being delivered to the burner will be adjusted by increasing or decreasing the zone pressure of the combustion air in the zone. Reducing the zone combustion air pressure reduces the quantity of fuel supplied to the burner, and result in lowering the heat input to the zone, but an increase in combustion air pressure will result in increase in the quantity of fuel supplied to the burner and also raise the heat input to the zone.

Application of Fuzzy-PID Controller to Ceramic Kiln Temperature Control

Fuzzy logic application to the Ceramic Kiln Temperature Control System (CKTCS) is developed to improve the system output responses. The parameters and characteristics of a controlled loop are to achieve the objectives by improving rise-time, decreasing overshoot and eliminating the steady-state errors. Fuzzy controllers adopt the principle of setting parameters range with fuzzy subsets noted with linguistic variables. The fuzzy system is configured with lack of information regarding the plant and vagueness of the rule base. Fuzzy sets for both the inputs and outputs are normalised and deffuzyfied using the Fuzzy Inference System (FIS). Fuzzy rules are then developed to link all the subsets variables.

Fuzzy system enumerates the configuration with statistical variables when X is input and Y as output. X variables are the inputs which are the error ‘e’ and error change ‘ec’ in this case. Applying a step input for the control initiates the system process as an input and the other from the feedback loop relating the input to the output values.

The gain values for K_P, K_I and K_D are the output variables of the Fuzzy Inference System (FIS) and required as input to the PID controller. The fuzzy rule base developed will process the output variables and select a crisp output from the deffuzification process. For Controller inputs, let X_1 = ‘e’ and X_2 be ‘ec’ with the sets to be the input variables and Kp, Ki and Kd as output variables. The outputs $Y_1 = K_P$, $Y_2 = K_I$ and $Y_3 = K_D$ of the PID parameters are assigned sets values range within the boundary limits while the universe of discourse is the operating temperature of the ceramic kiln. The commutative property of fuzzy logic is applied: $\underline{A} \cup \underline{B} = \underline{B} \cup \underline{A}$where all the subsets are mapped as with the functions for A and B. The absolute maxima values range from zero to one i.e. [0 1] while B ranges between {-X 0 X} sets

$$X_A(x) = \begin{cases} 1 & x \in A, \\ 0 & x \notin A, \end{cases} \quad \ldots\ldots\ldots 2$$

By setting the fuzzy sets as ranged for the Fuzzy-PID controller, range values for the inputs and outputs are obtained as follows:

$e = \{-1, 0.8, 0.6, 0.4, 0.2, 0, 0.2, 0.4, 0.6, 0.8, 1\}$

$ec = \{-0.5, -0.4, -0.3, -0.2, -0.1, 0, 0.1, 0.2, 0.3, 0.4, 0.5\}$

$K_P = \{-6, -5, -4, -3, -2, -1, 0, 1, 2, 3, 4, 5, 6\}$

$K_I = \{-6, -5, -4, -3, -2, -1, 0, 1, 2, 3, 4, 5, 6\}$

$K_D = \{-6, -5, -4, -3, -2, -1, 0, 1, 2, 3, 4, 5, 6\}$

Thus, the membership functions are developed using the Gaussian distribution function for the values of each fuzzy set. The fuzzy membership functions are divided into seven and they are assigned linguistic variables: **NB** – Negative Big, **NM** – Negative Medium, **NS** – Negative Small, **Z** – Zero, **PS** – Positive Small **PM** – Positive Medium and **PB**– Positive Big

The fuzzy sets are derived by intuition and the union function of the fuzzy sets is given as:

$\mu_{A \cup B}(x) = \mu_A(x) V \mu_B$ 3

$AX \rightarrow \mu_A(x) \leq \mu_x(x)$……..4

The fuzzy results generated are not directly applied to the model, therefore, the need for conversion of the fuzzy sets to crisp sets. The defuzzification possesses the capacity of reducing a fuzzy to a crisp single-valued quantity or as a set, or converting to the form in which fuzzy quantity is present. Defuzzification converts the membership function values into a single scalar quantity. The centroid model has

been adopted for this configuration. It is also known as centre of gravity, defined by the expression of equation 5.

$$Z^* = \int \frac{\mu_C(z)\, z dz}{\mu_C(z) dz} \quad \text{.....5}$$

Fuzzy rules are assigned, conditional or unconditional statements using IF-THEN. In the case of the Fuzzy-PID configuration, since there are two inputs and three outputs, the configuration technique is a union of the two input variables and the intersection of the three output variables.

The rule statement applied is: "IF X_1 is L_1 AND L_2 is R_2 THEN Y_1 is L_3 AND Y_2 is L_4 AND Y_3 id L_5". Where L_X is the assigned linguistic variable of the fuzzy sets. Thus, by translating the Fuzzy-PID Controller, it becomes: "IF **e** is $\mathbf{L_1}$ AND **ec** is $\mathbf{L_2}$ THEN $\mathbf{K_P}$ is $\mathbf{L_3}$ AND $\mathbf{K_I}$ is $\mathbf{L_4}$ AND $\mathbf{K_D}$ is $\mathbf{L_5}$". Table 1 is the summary of the rule base relationships for the inputs and outputs fuzzy configuration.

Table 1: Fuzzy-PID rule base for the kiln

e / ec	NB	NM	NS	ZE	PS	PM	PB
NB	NB	NB	NB	NM	NS	NS	ZE
NM	NB	NM	NM	NM	NS	ZE	PS
NS	NB	NM	NS	NS	ZE	PS	PM
ZE	NB	NM	NS	ZE	PS	PM	PB
PS	NM	NS	ZE	PS	PS	PM	PB
PM	NS	ZE	PS	PM	PM	PM	PB
PB	ZE	PS	PS	PM	PB	PB	PB

Configuration of Fuzzy-PID Temperature Controlled Ceramic Kiln on MATLAB

Graphical User Interface (GUI) for the Fuzzy-PID development allows the ease of fuzzy configuration on MATLAB. In order to design a system for the control of ceramic kiln temperature on the GUI interface, the system variables are developed independently. Fuzzy Inference System (FIS) is then configured to determine the PID control parameters that will give the optimum system output performances as show in figure 3.

The fuzzy logic method adopts a crisp set of variables and attaches a linguistic label, which is used to develop the fuzzy inference system. The fuzzy membership functions are ranged for each subset for the input and output variables. Mamdani's fuzzy inference method was adopted, based on fuzzy algorithm used for complex systems and decision process for each output variable that needs defuzzification.

The input value is set at desirable temperature requirement assumed to be 1500°C. The plant model and sensor transfer functions are input into the plant model. The FIS model is saved with a 'fis' extension file, which is loaded unto the fuzzy logic block model. The fuzzy logic block model is directly connected to the PID controller to complete the Fuzzy-PID controller. Since the outputs of the FIS are KP, KI and KD, these values are inputs for the PID controller for the system to respond optimally to the step input of the desired value of 1500°C.

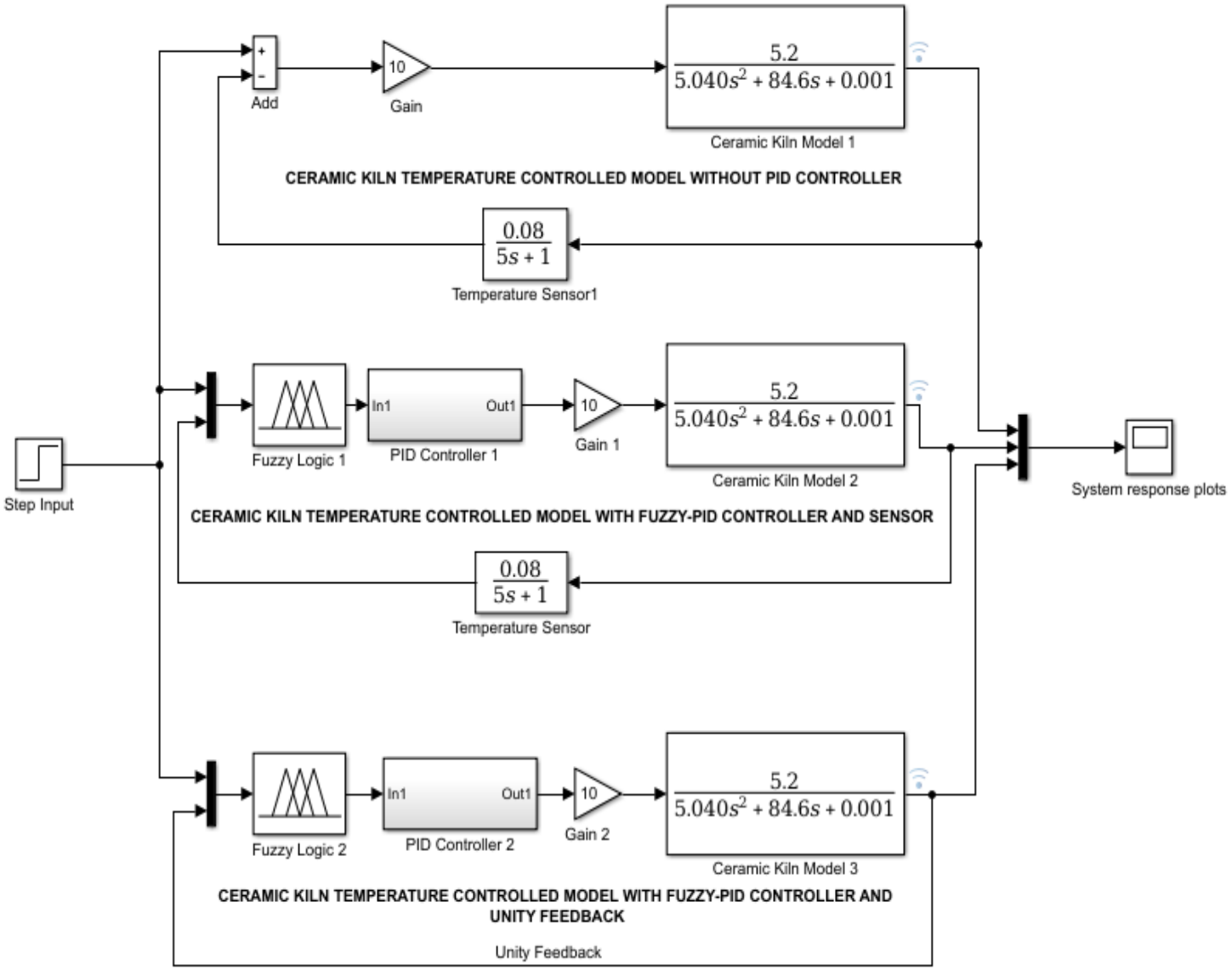

Figure 3 Configured GUI Simulink models of the CKTCS

Results and Discussion

Post-processing of the model was achieved after running the Fuzzy-PID temperature controlled system on MATLAB-Simulink. Here, the system response plots for the three models configured for comparison are presented. The input magnitude represents the reference temperature of 1500°C. The system oscillates with an overshoot of about 500°C (33.33%) in 1.5 seconds. The rise-time is precisely 0.5 seconds and settling time of 8 seconds. The system was observed to be unstable. Observation shows that for the closed loop system (Fuzzy-PID and temperature sensor feedback) the output characteristics has no overshoot with rise-time of 2.24seconds and settling time of 7seconds with no steady state errors and the system became stable. The combined plots for the three models is displayed on Figure 4 for comparison. The summary of the system response characteristics values is shown in table 2.

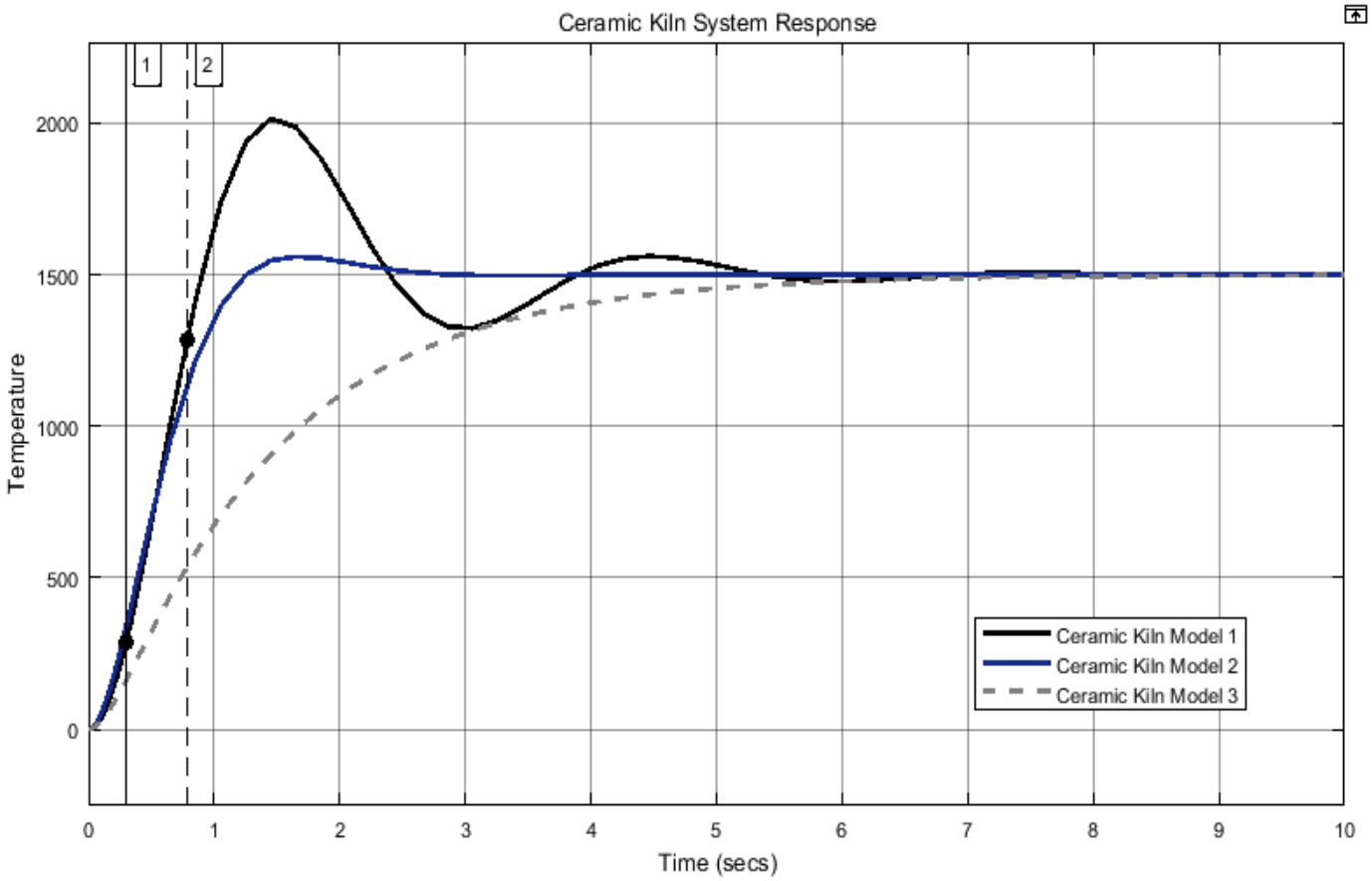

Figure 4 Comparison chart response plots for the three models of CKTCS

Table 2 : System characteristics comparison for CKTCS models

	Rise Time	**Overshoot %**	**Settling Time**	**S-S Error**	**Stability**
No Fuzzy-PID	0.50	33.33	8.00	24.3	Unstable
Fuzzy-PID + Unity	0.61	4.00	2.50	0	Stable
Fuzzy-PID + Sensor	2.24	0	7.00	0	Stable

Conclusion

The responses of a measured process variable over time to changes in the controller output signal is essential to the design method and tuning choice of a PID controller. Model without the Fuzzy-PID controller experienced the largest deviation, which logically validates the effect of the Fuzzy-PID controller on system controllability, stability and performance.

References

Aborisade, D. O. &Adewuyi P. A (2014). Evaluation of PID Tuning Methods on Direct Gas –Fired Oven. *International Journal of Engineering Research and Application*, **4**(3): 01-09.

Afshan I, Shaguffa J & Mohammad A.(2013). Tuning of Conventional PID and Fuzzy Logic Controller Using DeffirentDefuzzification Techniques. *International Journal of Science and Technology Research*. **2** (1):138-142

Constantin, V. (2012). Tuning Fuzzy PID Controllers: Introduction to PID Controllers Theory,and Application: Oxford, England: Oxford University Press.

Dingyu, X., Yang Q., & Derek P.(2007). "Linear Feedback Control: Analysis and Design", The Society for Industrial and Applied Mathematics, pp 200-210.

Hassanein H. & Ali A. (2010). "Fuzzy Logic with Engineering Applications", Design and Stability Analysis, 3rd ed., ChichesterRoyaume University, Wiley, pp275.

Satya S. &Omhari G.(2012). "High Performance Fuzzy Adaptive PID Speed Control of a Converter Driven DC Motor**",** *International Journal of Control and Automation.*